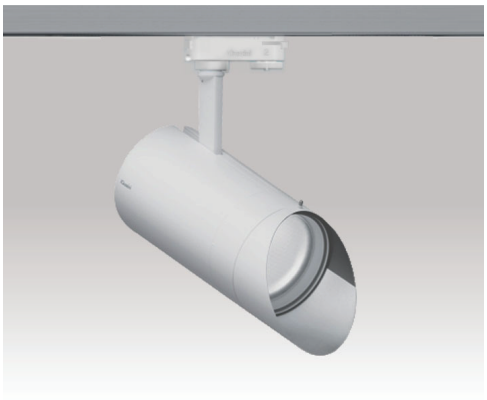

Palco, a veritable family of projectors, considers the work exhibited not only as a physical element, but also its content, the feelings and the message that it is communicating, without forgetting about the space and its contribution to the work. Its shape is inspired by the brush, the main tool used by the artist in the creative process.

Luminaire characteristic:	**Power input:** 7.5, 26.5 or 29W **Lumens:** from 235 to 2010lm (for 3000K, 90CRI) **Luminaire efficacy:** Up to 69lm/W
Source:	White LED (LM-80 tested) 3000K : 90CRI, 4000K : 80CRI.
Lumen maintenance:	80% of initial lumens at 50 000 hours (L80).
Optic:	Super Spot, Spot, Medium, Flood, Wide Flood or Wall Washer optics.
Material:	Optical body and arm: Die-cast aluminum Accessory holder ring and driver housing: thermoplastic Reflector: formed aluminum (all optics except Super Spot) Lens: methacrylate (only for Super Spot optic) Protective screen: glass.
Mounting:	Track adaptor with circuit selector for two circuit tracks. Also, compatible with TEK or HTEK from Nordic Aluminum.
Electrical:	Integral high efficiency driver 120 / 277V
Dimming:	Leading (Triac) and trailing edge (ELV) for 120V only.
Finish:	White RAL9010, Black.
Weight:	STANDARD: 2.8lbs (1.3kg) WALL WASHER: 3.2lbs (1.4kg)
Warranty:	5 year limited warranty.
Ratings:	IP20
Certification:	cULus listed for dry location.

iGuzzini NORTH AMERICA
9320 Boul. St-Laurent, suite 100, Montréal (Québec) Canada H2N 1N7, P.: 514.523.1339 F.: 514.525.6107 www.iguzzini-na.com

ORDERING INFO

IPLC S - - - - -
FIXTURE

RESET

MODEL

IPLC S - Small

LED

- ☐ **840 -** 4000K, 80 CRI
- ☐ **930 -** 3000K, 90 CRI

OPTIC

- ☐ **SS -** Super Spot[1]
- ☐ **SP -** Spot
- ☐ **MD -** Medium
- ☐ **FL -** Flood
- ☐ **WF -** Wide Flood
- ☐ **WW -** Wall Washer

VOLTAGE

- ☐ **120 -** 120V
- ☐ **277 -** 277V

FINISH

- ☐ **01 -** White
- ☐ **02 -** Black

DIMMING

- ☐ **LTE -** Leading and Trailing edge dimming (120V only)

[1] Only available with 3000K, 90CRI LED **(930)**

ACCESSORIES (TO BE ORDERED SEPARATELY)

for installation consult the instruction sheet

INTERCHANGEABLE REFLECTORS

- ☐ **IMXW5-12 -** Spot
- ☐ **IMXW6-12 -** Medium
- ☐ **IMXW7-12 -** Flood
- ☐ **IMXW8-12 -** Wide Flood

LENS (Maximum 1 per fixture)

- ☐ **IMXD8-24 -** Soft focus lens

- ☐ **IMXB7-24 -** Medium elliptical lens
- ☐ **IMXC0-24 -** Large elliptical lens
- ☐ **IMY34-24 -** Opti beam elliptical lens[1]

OPTICAL ACCESSORIES

- ☐ **IMXF0-02 -** Louvre (black)[2]
- ☐ **IMY90-02 -** Opti beam louvre (black)

- ☐ **IMXF3-01 -** Antiglare screen (white)[3]
- ☐ **IMXF3-02 -** Antiglare screen (black)[3]

- ☐ **IMXF6-02 -** Directional flaps (black)

[1] Only available for **Super Spot (SS)**.
[2] Must be used with **IMXD8** lens.
[3] Only available for **Super Spot (SS)** and **Spot (SP)** optics and **IMXD8** must be used with **Spot (SP)** optic assembly.

DIMENSION

STANDARD
Super Spot, Spot, Medium, Flood and Wide Flood optics

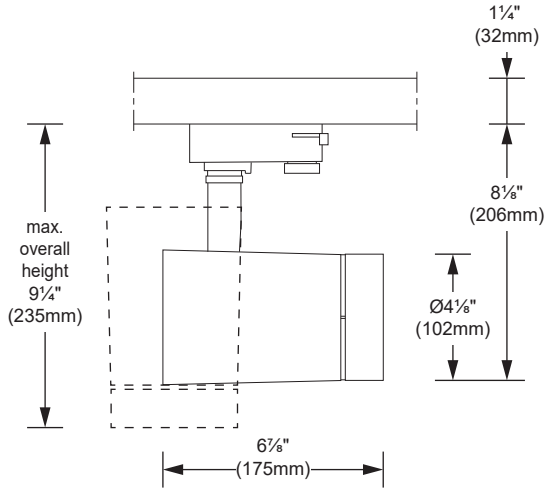

WALL WASHER

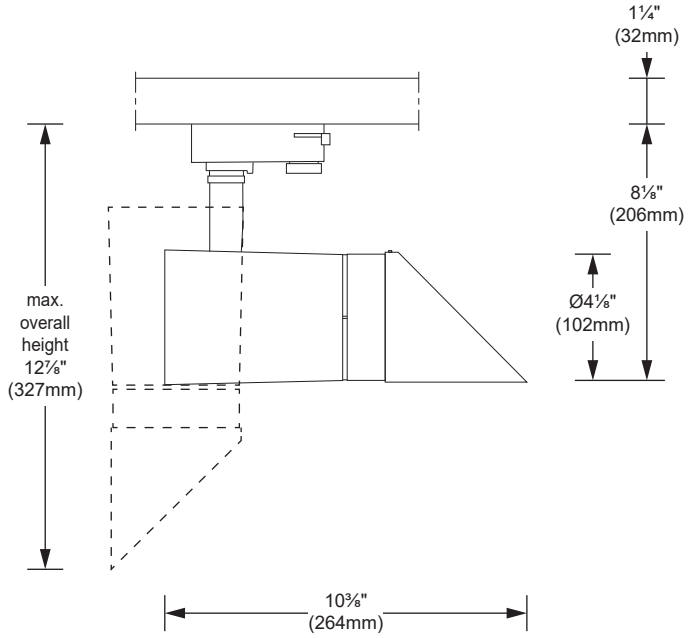

WALL WASHER SUGGESTED SPACING AND WALL DISTANCE

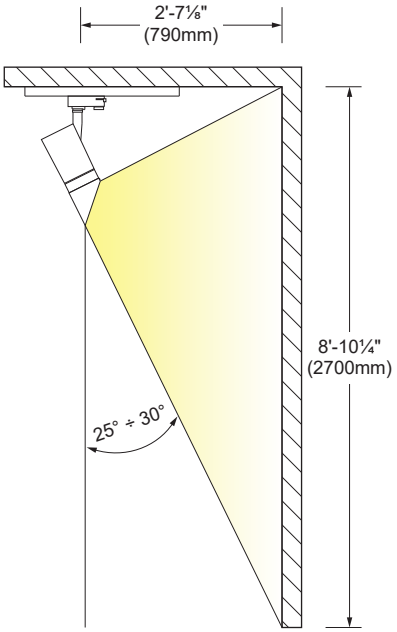

SIDE VIEW

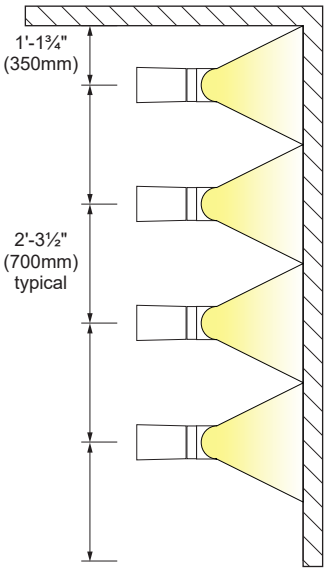

TOP VIEW

LED COLOR FIDELITY DATA

CRI	CCT	R1	R2	R3	R4	R5	R6	R7	R8	R9	R10	R11	R12	R13	R14	R15	Rf	Rg	Melanopic ratio
80	4000K	82	91	96	82	83	87	86	65	11	78	82	65	85	98	-	85	95	0.694
90	3000K	94	97	99	94	94	96	93	83	62	92	95	84	95	99	-	93	99	0.563

PHOTOMETRIC DATA

Visit iguzzini.com/us for complete photometric data.

CCT (K)	CRI	LOAD (W)	OPTIC	LUMENS (lm)	EFFICACY (lm / w)	MAX CANDELA (cd)
3000K	90	7.5W	Super spot 6°	235	31	13 495
		29W	Spot 13°	1 960	67	20 965
			Medium 20°	1 955	67	11 300
			Flood 38°	1 895	65	5 285
			Wide flood 46°	2 010	69	3 830
			Wall washer	1 010	34	1 555
4000K	80	26.5W	Spot 13°	2 220	83	23 775
			Medium 20°	2 220	83	12 830
			Flood 38°	2 150	81	5 995
			Wide flood 46°	2 280	86	4 345
			Wall washer	1 145	43	1 760

Super spot 6° (3000K, 90 CRI)

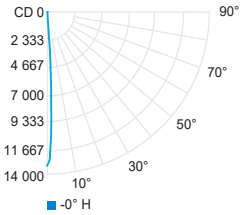

	Center beam fc	Beam width ft
2ft	3 374	0.2
4ft	843	0.4
6ft	375	0.7
8ft	211	0.9
10ft	135	1.1
12ft	93.7	1.3

Spot 13° (3000K, 90 CRI)

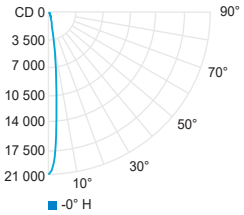

	Center beam fc	Beam width ft
2ft	5 242	0.4
4ft	1 310	0.9
6ft	582	1.3
8ft	328	1.8
10ft	210	2.2
12ft	146	2.7

Medium 20° (3000K, 90 CRI)

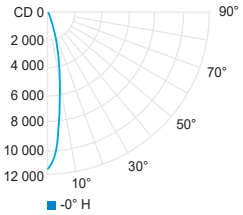

	Center beam fc	Beam width ft
2ft	2 826	0.7
4ft	707	1.4
6ft	314	2.1
8ft	177	2.8
10ft	113	3.5
12ft	78.5	4.2

Flood 38° (3000K, 90 CRI)

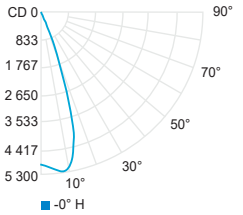

	Center beam fc	Beam width ft
2ft	1 252	1.3
4ft	313	2.7
6ft	139	4.0
8ft	78.3	5.3
10ft	50.1	6.6
12ft	34.8	8.0

Wide flood 46° (3000K, 90 CRI)

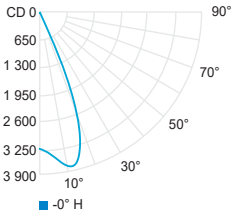

	Center beam fc	Beam width ft
2ft	826	1.5
4ft	206	3.0
6ft	91.8	4.5
8ft	51.6	6.0
10ft	33	7.5
12ft	22.9	9.0
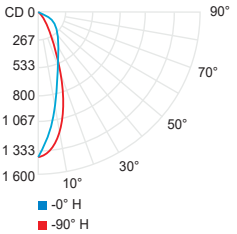
Wall washer (3000K, 90 CRI)